Uninstall:

1. Follow steps 1-3 in Installation Instructions.
2. Back out setscrew in center of Laser.
3. Using brass punch put the narrow end of the punch on the flat surface of the laser dove tail.
4. Using a small hammer drive the laser out from right to left.
5. Back out laser setscrews until flush.
6. Wait 15 minutes for adjustment reset and reinstall if desired.

Battery Installation: (4) 377

1. Unscrew battery cap and remove batteries.
2. Install new batteries.
3. Screw in battery cap and tighten.

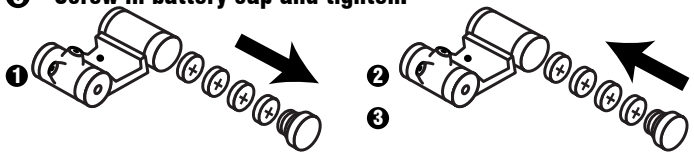

WARRANTY:
One Year Limited Warranty.

DANGER
LASER LIGHT AVOID DIRECT EYE EXPOSURE
POWER OUTPUT < 5mw WAVELENGTH 630-670mm
CLASS IIIa PRODUCT

LASERLYTE®
A Division of P&L Industries
101 Airpark Road - Cottonwood, AZ 86326
Phone 928-649-3201 - Fax 928-649-3970
www.LaserLyte.com

MADE IN U.S.A.

Printed on recycled paper

LASERLYTE

REAR SIGHT LASER

- Fits Ruger 10/22 rifles
- Replaces factory rear sight
- Includes all hardware for installation
- Dual laser modes with LED emissions indicator

6 89706 21066 3
RL-1022
Patents Pending

CE
RoHS

REV0510

MADE IN U.S.A.

REAR SIGHT LASER - RUGER® 10/22

RL-1022

LASERLYTE

www.LASERLYTE.com

Rear Sight Laser for Ruger 10/22 Rifles

RL-1022

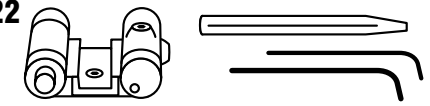

Installation:

1. **UNLOAD YOUR FIREARM!**
2. ***Attach danger label to barrel of gun near laser with arrow pointing toward front sight.***
3. **Remove rear sight from barrel.**
4. **With laser facing toward the front, start laser dove tail into the dove tail of the barrel.**
5. **Using provided brass punch, place narrow tip of punch onto flat surface of the laser dove tail.**
6. **Using a small hammer, tap punch until the laser is centered in the middle of the barrel.**
7. **Using the included .050 Allen wrench, tighten locking screw in the center of the laser.**

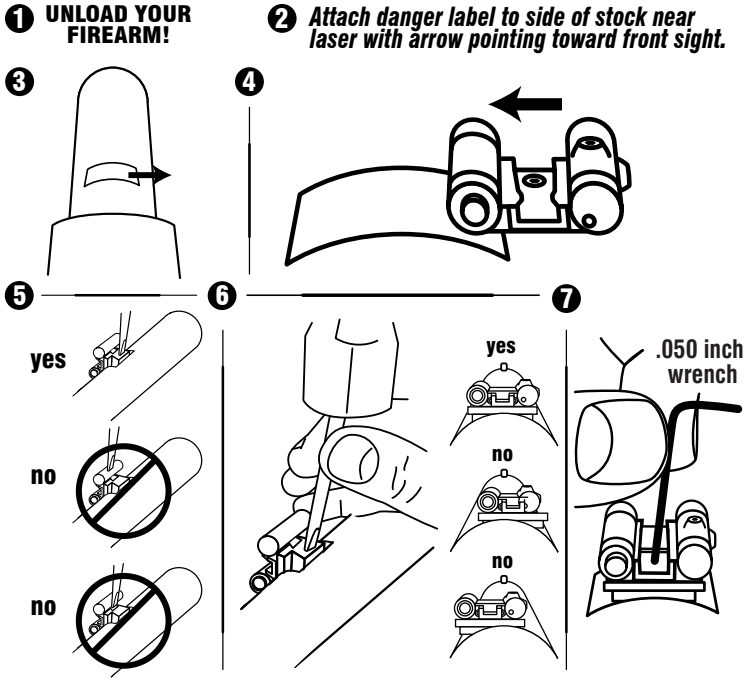

Activation:

1. **Push button once and the laser will be on constant mode.**
2. **Push button twice and the laser will be on pulse mode.**
3. **Push button three times the laser will turn off.**
4. **The small L.E.D. on the back will indicate what mode you are in.**

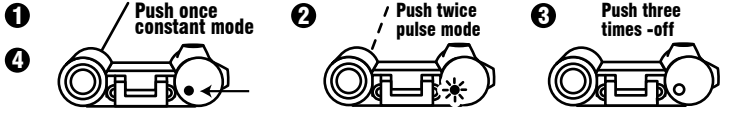

Laser Sight In:
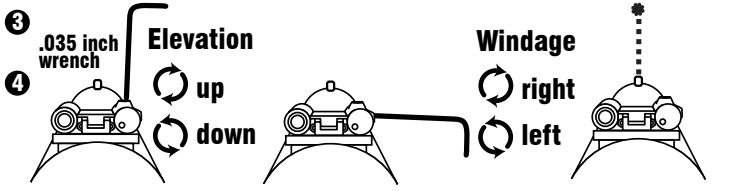
1. **Assemble barrel and spring into slide and then install back onto gun.**
2. **Make sure your firearm is unloaded and always point in a safe direction.**
3. **Use the provided .035 Allen wrench to adjust the sight.**
4. **Always end adjustments on a clockwise turn.**
5. **Make final adjustments at shooting range.**